Fuji Electric

VFZ401A-5W

NEMA Premium
IE3

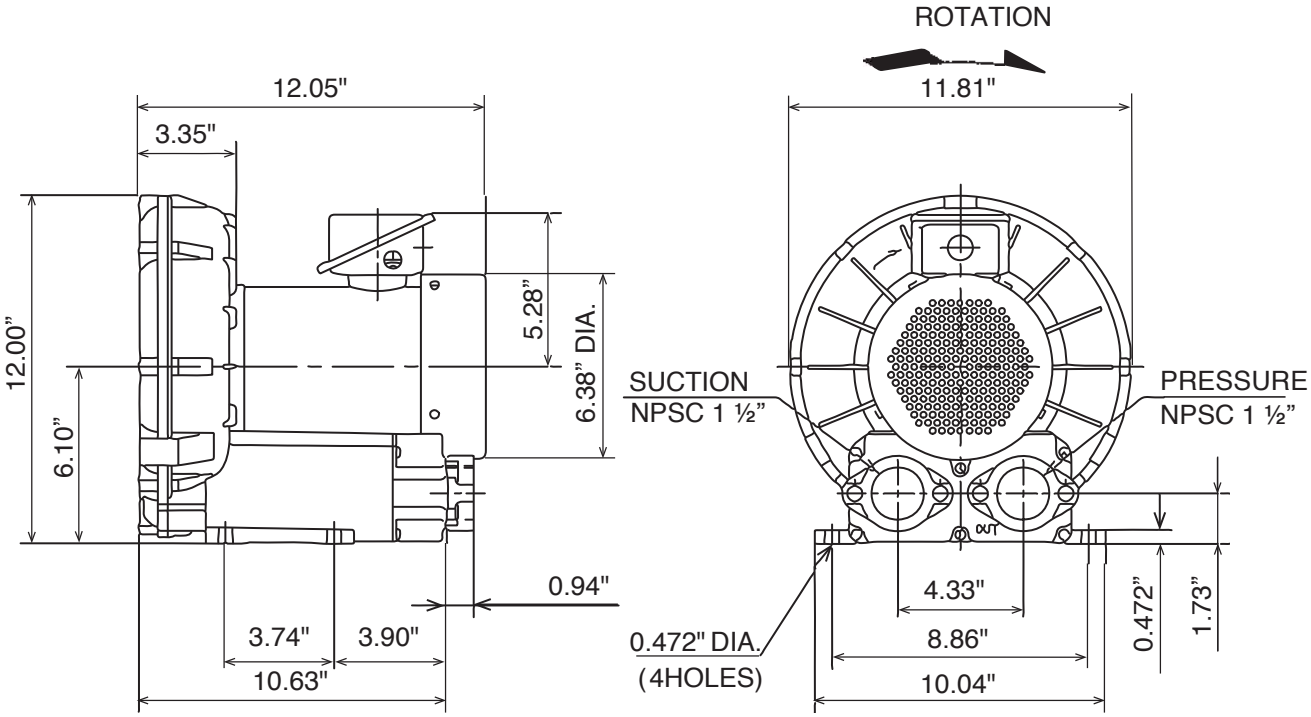

Specifications

Model	VFZ401A-5W
HP	1.4HP
Hz	60
Phase	3
Voltage	575
Max. Amps	1.4
Locked Rotor Amps	28.8
Max. Pressure (in. H2O)	58
Max. Vacuum (in. H2O)	52
Max. Airflow Pressure (SCFM)	89
Max. Airflow Vacuum (SCFM)	84
Min. Airflow Pressure (SCFM)	7
Min. Airflow Vacuum (SCFM)	0
Max. Air Temperature Rise (ºF)	142
Weight (lbs.)	46

Fuji Electric Corp. of America
47520 Westinghouse Dr., Fremont, CA 94539
x-fea-rc-group@fujielectric.com

Pressure

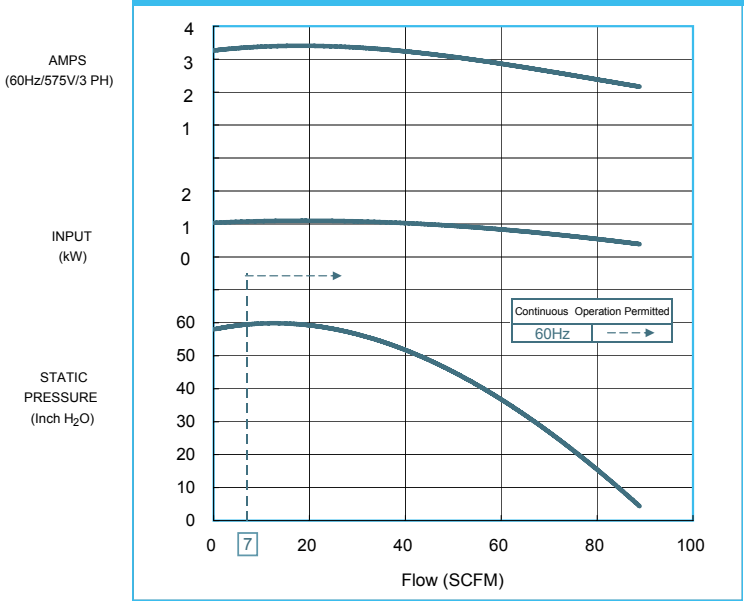

Vacuum

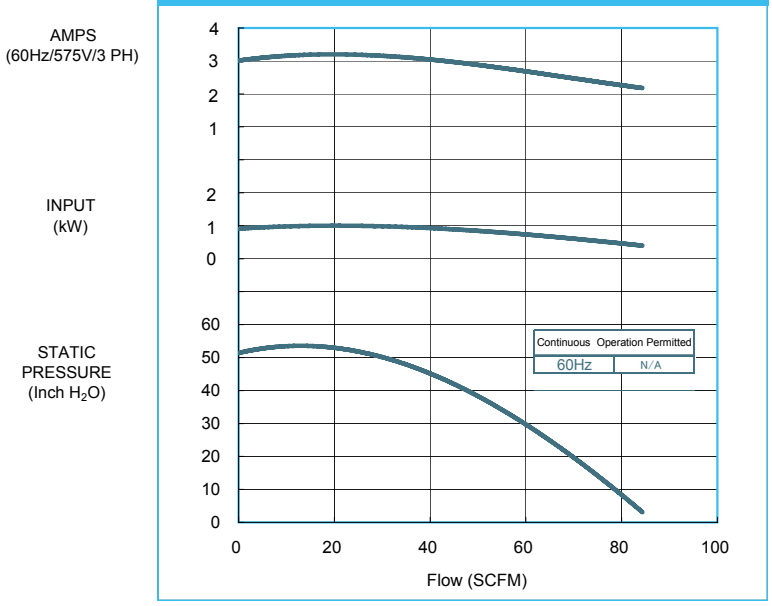

Temperature Rise

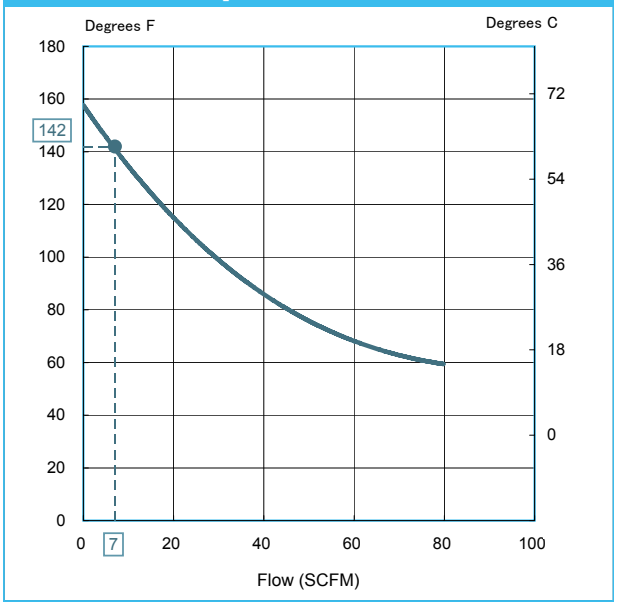

Max.Air Temperature is Value Marked •
Plus 40 Degrees C Ambient Temperature

Accessories

Inlet Filter	F-45
Inlet Filter/ Silencer	FS-45
In-Line Vacuum Filter	IVF-45
Pressure Relief Valve	PV4
Vacuum Relief Valve	Not Required
Silencer 1-½”	VFY024A

Fuji Electric

Fuji Electric Corp. of America
47520 Westinghouse Dr., Fremont, CA 94539
x-fea-rc-group@fujielectric.com